US | SOlar Pumps®
HOME FOR ALL YOUR MICRO-DC PUMP NEEDS!

MG200 Series

Magnetic Drive Micro Gear Pump (DC brush motor)

Introduction:

1. Magnetic gear pumps feature a magnetically coupled drive system that eliminates leakage. They are constructed with a 316 stainless steel housing, PEEK gears, and PTFE components for the static seals and bearings. An optional built-in pressure relief valve can also be included.
2. Pump can be used in the -0.1 Mpa～2Mpa closed systems, the rated output pressure is 0.5 Mpa (medium: water), the highest output 1.4 Mpa pressure, flow rate 50～3500 ml/min.
3. Widely used in medical machinery, fine chemicals, water treatment, printing, cleaning, packaging, food processing, and other areas of liquid delivery.



Normal Parameters:

1. Altitude: ≤ 2500 M
2. Environment humidityz: ≤ 85%
3. Fluid viscosity: 0 ~ 3000 CPS
4. Ambient temperature: -10 ~ 50 °C
5. Fluid temperature: -10°C ≤ T ≤ 100 °C (except for freezing)
6. Operating Mode: Continuous operation
7. Compatible Media: Suitable for handling acids, alkalis, salts, organic solvents, and oils.
8. Lifetime 1500～2000 hours

Dimension (mm):

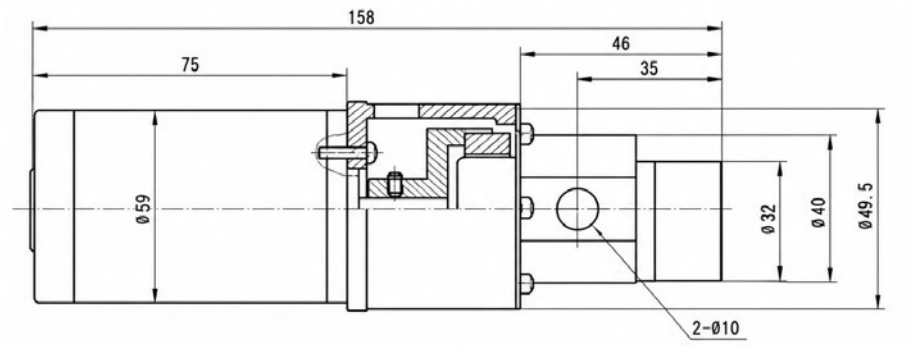

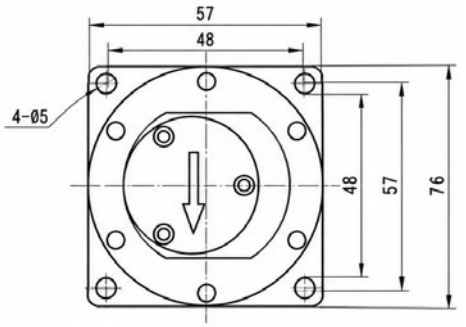

MG200 Series

Model	Max Head Pressure (Bar)	Max Flow Scope (ml/Min)	Power (W)	Voltage (V)	Inlet/Outlet Diameter	ml/rpm (reference 3000RPM)
MG204XK/DC24	10	1000	70W	DC24	G1/8”	0.27
MG209XK/DC24	7	2500	70W	DC24	G1/8”	0.55
MG213XK/DC24	7	3500	70W	DC24	G1/8”	0.75

Note: 1. "04" means the gear with the height of 4mm, "09" means 9mm, "13" means 13mm.
2. If needed : "L" limited pressure valve, " R " non return valve, please specially specify in advance.
3. "XK" PEEK gear, "YT" Alloy gear, if the liquid contain rigid particles, such as pigment ink,recommend use YT gear.

Detail Curve / DC MG200 Series

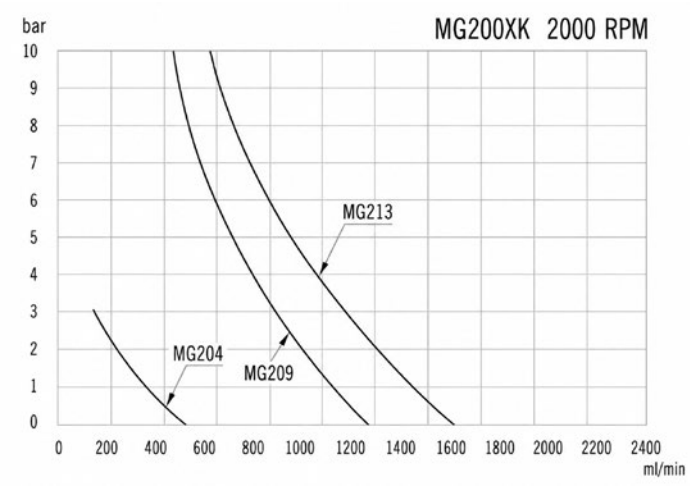

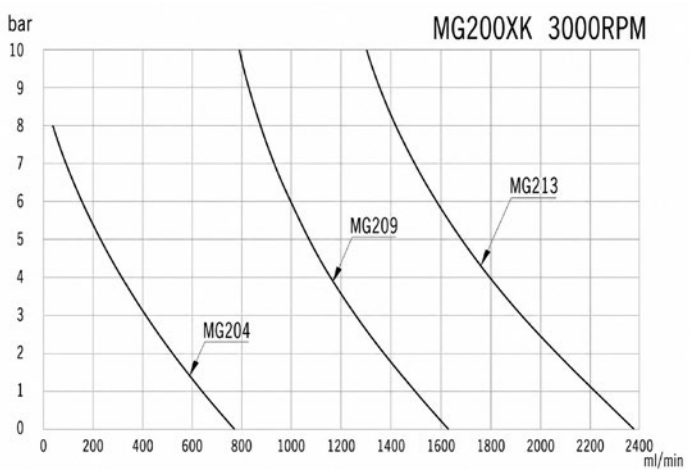

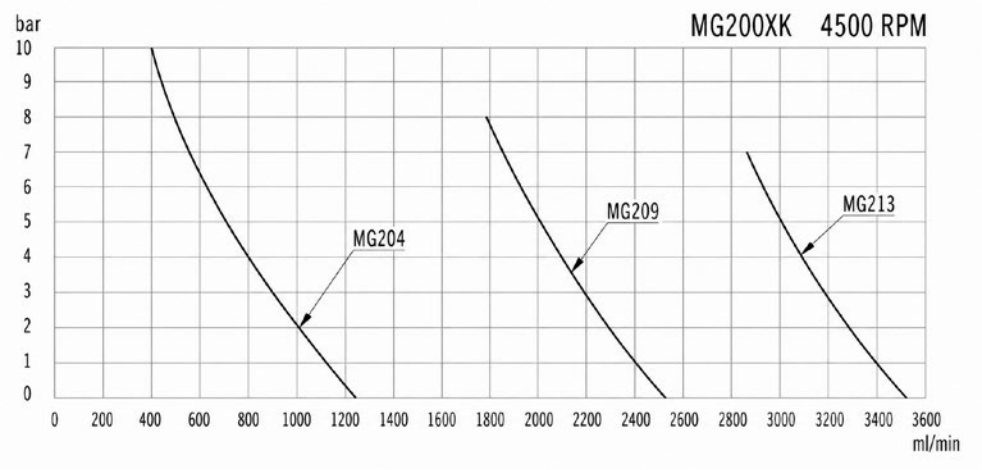

Note: Usually suggested to work under 4000RPM, not higher than this.
Above test result basis on the medium of water.