US | SOlar Pumps®

HOME FOR ALL YOUR MICRO-DC PUMP NEEDS!

Instructions on Brushless DC Water Pump's Speed Control

0-5V and PWM speed control operation intructions



Applicable modes for 0-5V or PWM speed control functions

D5 Series



B10 Series



C01 Series

A6 Series (PPS) C2



Wiring Diagram of Brushless DC Water Pumps' 5V Speed Control

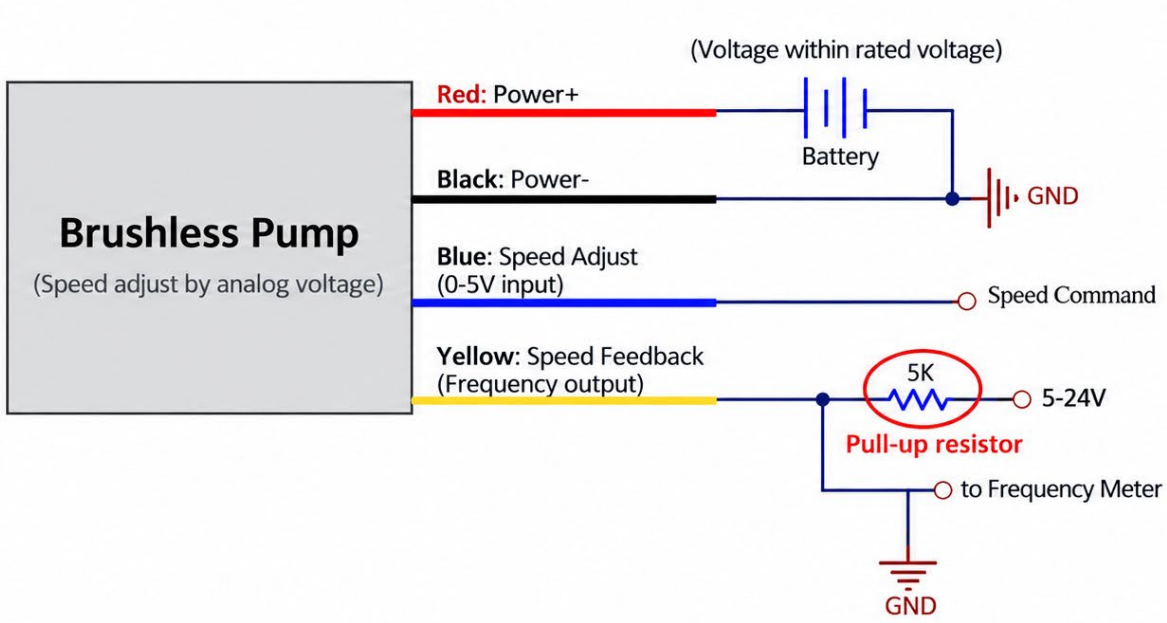

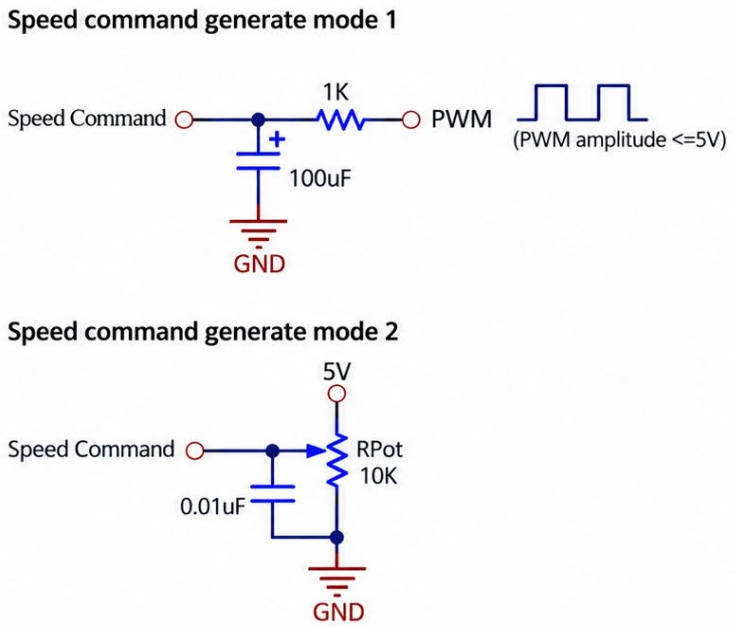

Note: Speed measurement must connect pull-up resistor.

Instructions on Diagram of Brushless DC Water Pumps' 5V Speed Control

Take C1-A24-2411 for example:



C1-A24-2411 Brushless Water Pump

Red wire: Positive power supply +

Black wire: Negative power supply -

→ Pump rated input voltage 24V; operating range 12-28V

Blue wire: 5Vpower supply (Input category: simulating voltage signal; Limits on inlet&outlet voltage 0-5V)

Operating instructions:

✓ 1. Pump works normally with red, black and blue wires connected simultaneously;

✗ 2. Pump does not work if the blue wire is not connected;

✗ 3. Pump would work for a while if black and red wires are connected, while blue wire is occasionally connected with 5V power supply;

✗ 4. Pump is likely to be burned out if blue wire is powered by voltage over 5.5V.

5V Control Specifications:

- 0-0.5V pump stops;
- 0.6V-5V pump speed increases linearly;
- 5V pump works at full speed.

C1/5V-A24-2411 performance curve under different voltage input within 0-5V

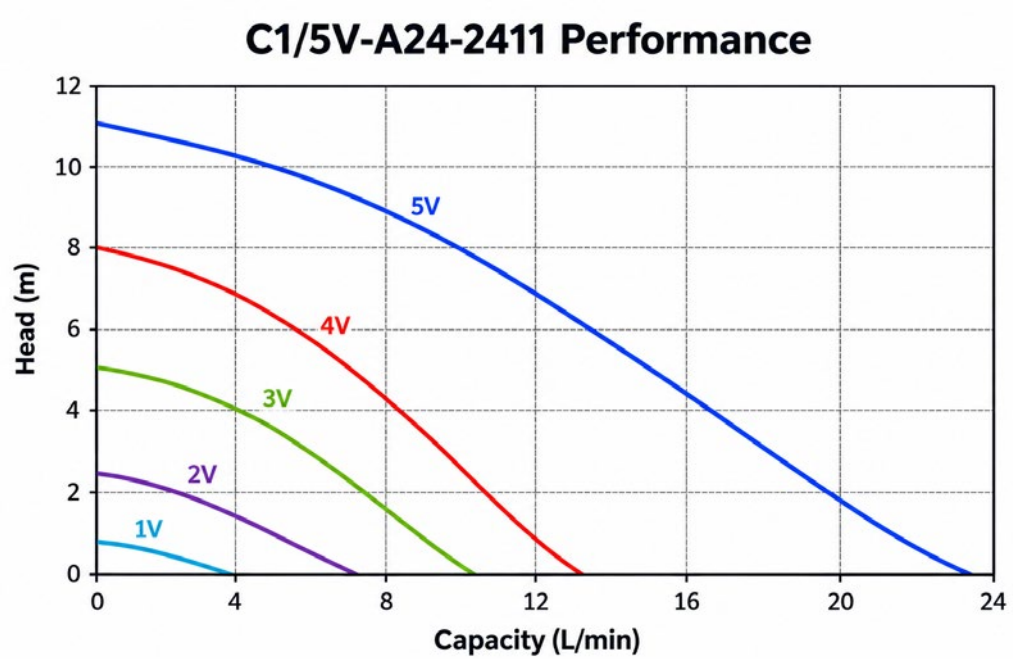

Conclusions:

C1/5V-A24-2411 DC Water Pump can be customized with 0-5V speed control function as the following controlling way:

- 0-0.5V pump does not work;
- 0.6V-5V pump speed increases linearly;
- 5V pump works at full speed.

0-5V Wiring precautions

No.	Wrong wiring cases	Consequences	Correct wiring connection
1	Reserve positive and negative power supply	Pump without polarity protection will be burned	Red connected to the positive, black negative plus
2	Speed port is connected to power source directly	Pump will be burned if power supply is > 5V	Only voltage signal which is ≤ 5V can be connected
3	0-5V speed port is connected to PWM signal	Pump will work normally if voltage is <5V	Only voltage signal which is ≤ 5V can be connected
4	Power supply is connected with AC power or DC power > DC30V	Pump will be burned	Accessing DC power within operating voltage range

Diagram on Brushless DC Water Pumps' PWM Speed Control

Take C1/PWM-A12-1706 for example:



Red wire: Positive power supply +

Black wire: Negative power supply -

→ Pump rated input voltage 12V; operating range 6-16V

Brown wires: Frequency signal generator (Input category: PWM signal;
Limits on inlet&outlet voltage range 5V, Frequency 500-10KHz, Duty Ratio 0%-100%))

Operating instructions:

- ✓ 1. Pump works normally with red, black and blue wires connected simultaneously;
- ✗ 2. Pump does not work if the blue wire is not connected;
- ✗ 3. Pump would work for a while if black and red wires are connected, while blue wire is occasionally connected with 5V power supply;
- ✗ 4. Pump is likely to be burned out if blue wire is powered by voltage over 5.5V.

5V Control Specifications:

- 0-0.5V pump stops;
- 0.6V-5V pump speed increases linearly;
- 5V pump works at full speed.

Exception: A6(PPS) PWM Frequency Range 100Hz-500Hz

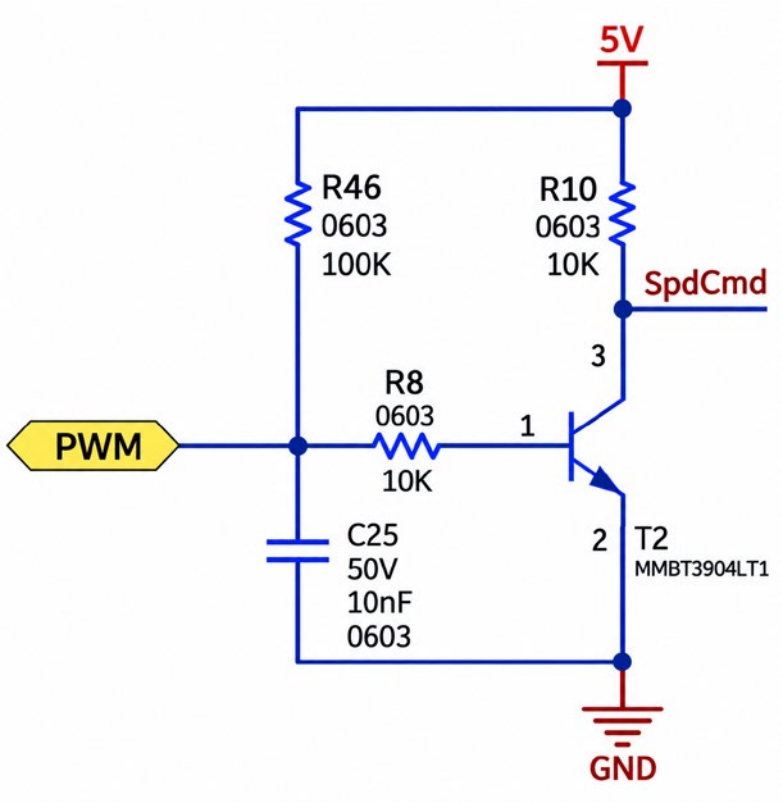

1. It is ok to adopt an open collector output, as we have pull-up resistor in our pump motor. Here is a interface circuit for your reference:
2. It is more suitable to adjust frequency range of PWM within 100Hz–500Hz. Different from normal pump modes, A6 circuit has been changed in the following 2 points:

   -- The PWM input uses the positive voltage duty cycle of the measurement pulse to obtain the speed command; As usual, the pulse is strongly filtered to become a voltage signal, and then the voltage is measured to obtain the speed command.
   -- Based on above point, the frequency of PWM has to be dropped.
3. So it is recommended to input frequency 100HZ–500H to A6 pump for speed control and product will be better in anti-interference ability.
4. Currently, stop mode has not been set for A6/PWM series.

Wiring Diagram of Brushless DC Water Pumps' PWM Speed Control

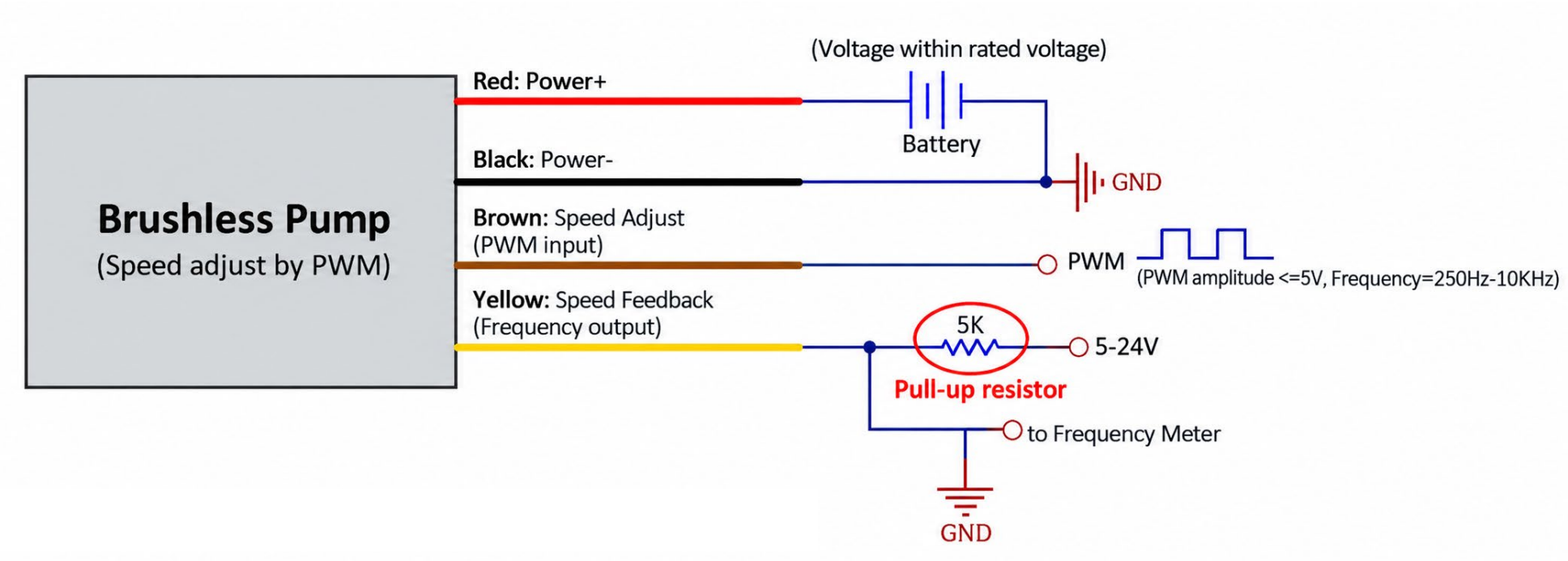

Note: Speed measurement must connect pull-up resistor.

Although the pump can run at some frequency and speed can be controlled, the internal signal is abnormal (as shown in Figure 2). Besides, long-term operation will reduce the pump life, finally burnout.

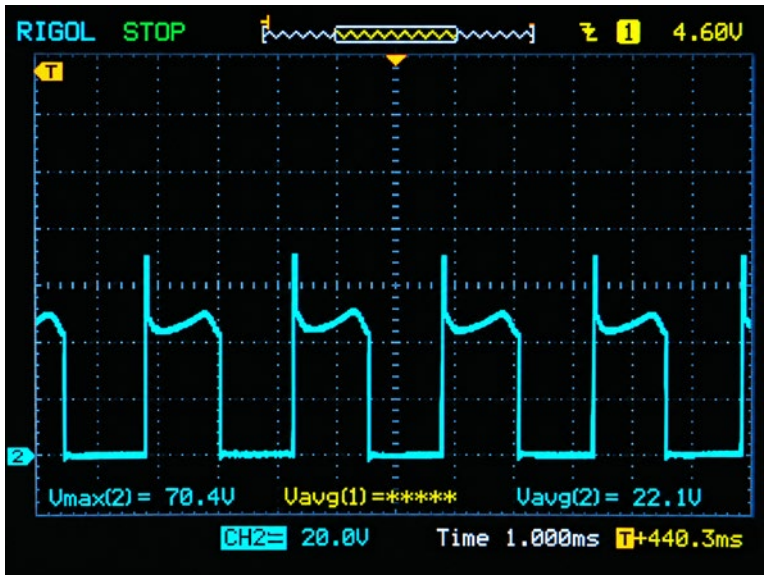

Figure 1: Pump's waveform under normal operation

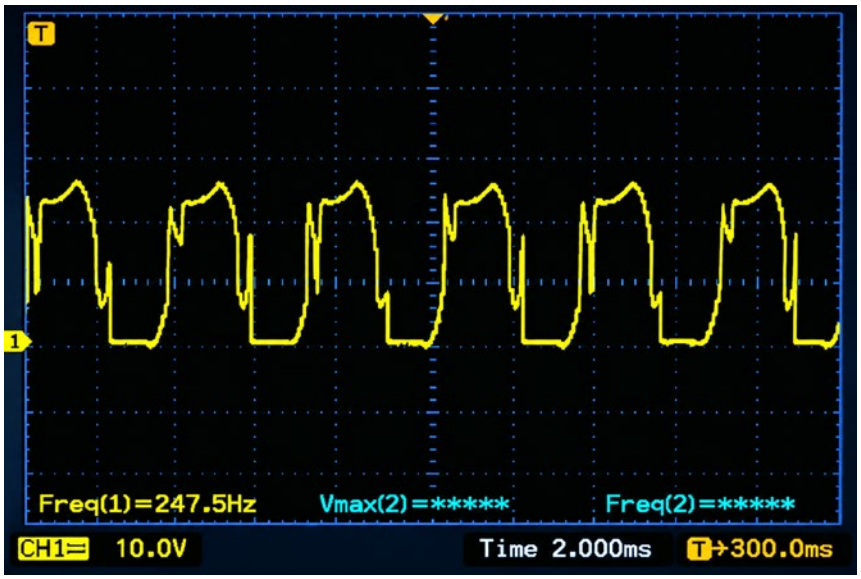

Figure 2: Pump's waveform under PWM modulation, but without customized PWM function

A6/PWM-R12-3409 Performance Curve Under Different Speed Signal (PWM Duty Cycle)

Curve 1: Speed signal VS power percent applied to BLDC motor

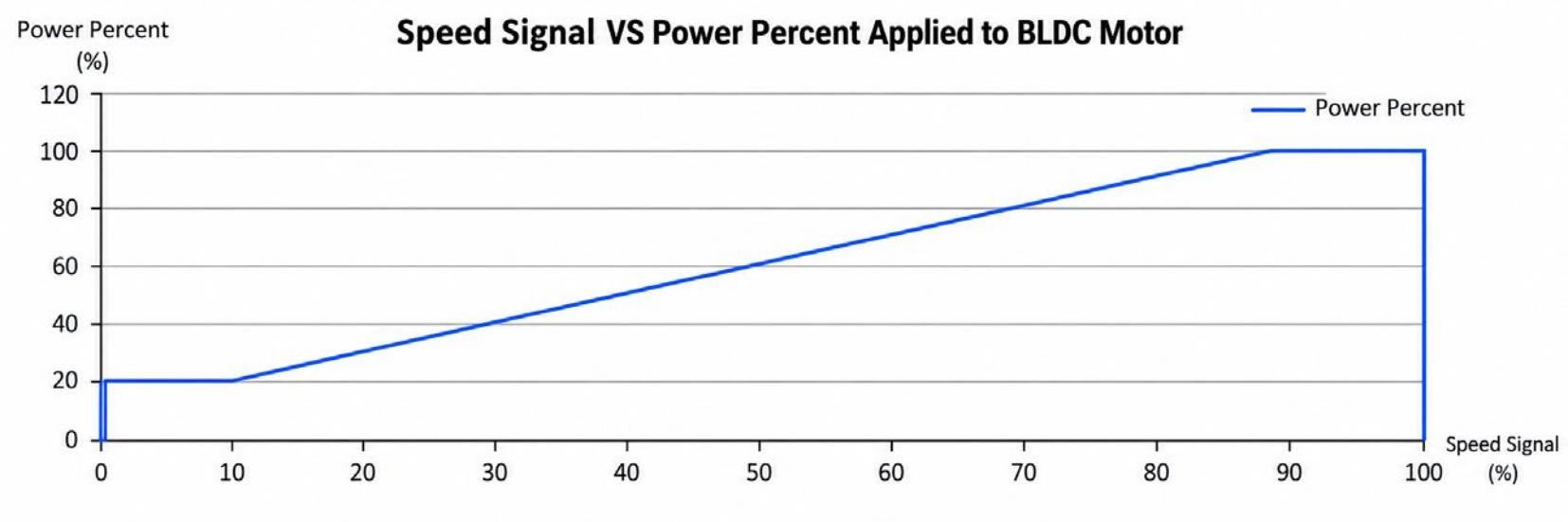

Note 1: Do not set the PWM duty cycle below 2% or above 98%, as the pump may operate incorrectly.

Note 2: For applications without a PWM generator, a low-level signal (equivalent to 0% duty cycle) will operate the pump at its minimum speed, while a high-level signal (equivalent to 100% duty cycle) will operate the pump at full speed.

Note 3: A PWM signal with a frequency of 100–500 Hz and an amplitude of 5 V is recommended.

A6/PWM-R12-3409 Performance Curve Under Different Speed Signal (PWM Duty Cycle)

Curve 2: A6-12V pump performance curve under different speed signal (PWM Duty Cycle)

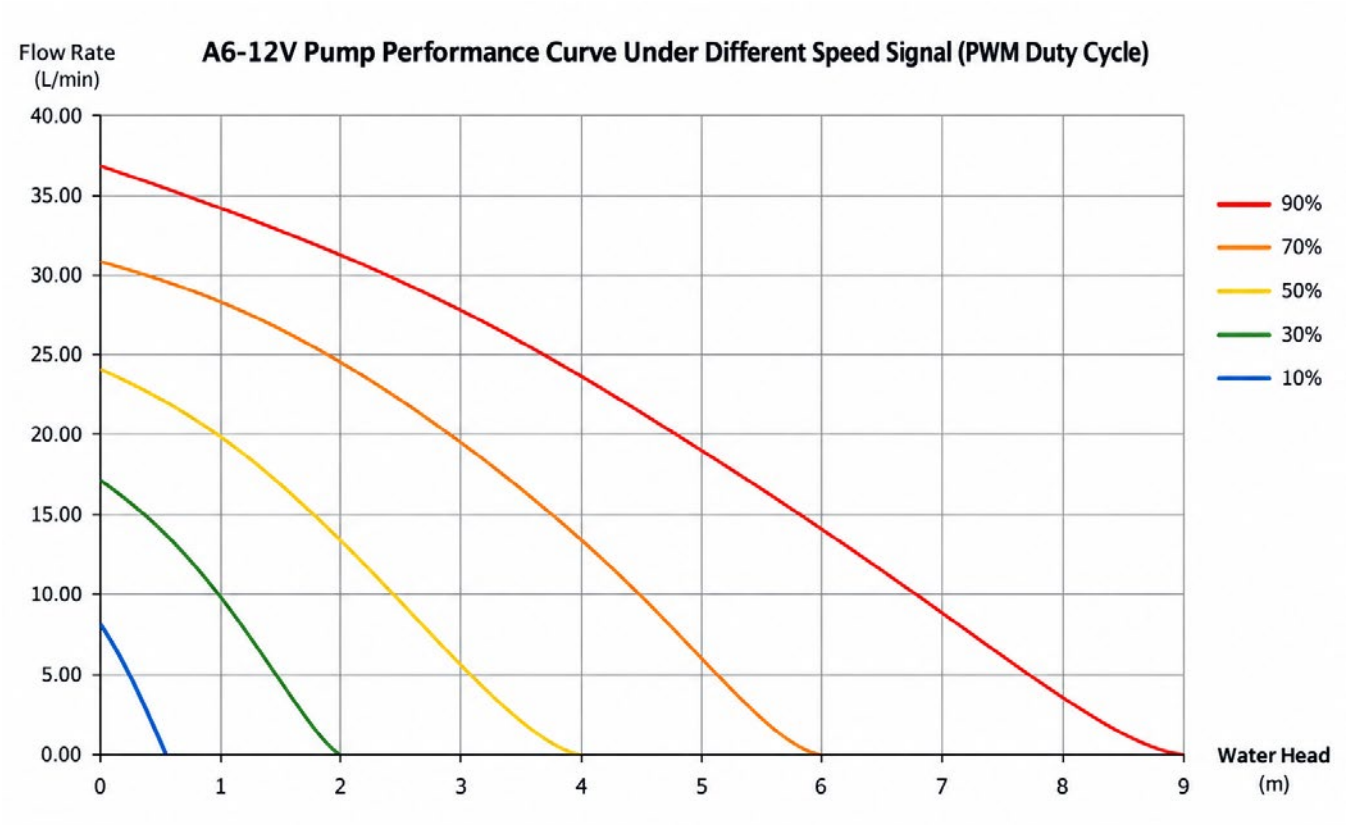

A6/PWM-R24-3709 Performance Curve Under Different Speed Signal (PWM Duty Cycle)

Curve 1: Speed signal VS power percent applied to BLDC motor

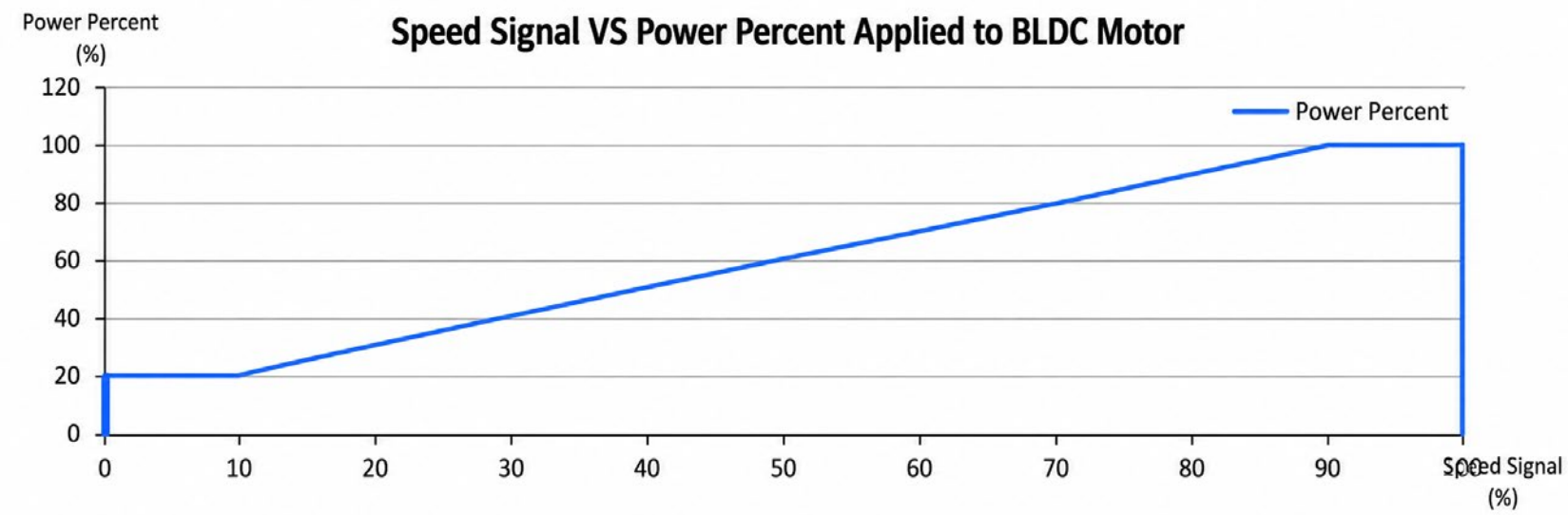

Note 1: Do not set the PWM duty cycle below 2% or above 98%, as the pump may operate incorrectly.

Note 2: For applications without a PWM generator, a low-level signal (equivalent to 0% duty cycle) will operate the pump at its minimum speed, while a high-level signal (equivalent to 100% duty cycle) will operate the pump at full speed.

Note 3: A PWM signal with a frequency of 100–500 Hz and an amplitude of 5 V is recommended.

A6/PWM-R24-3709 Performance Curve Under Different Speed Signal (PWM Duty Cycle)

Curve 2: A6-24V pump performance curve under different speed signal (PWM Duty Cycle)

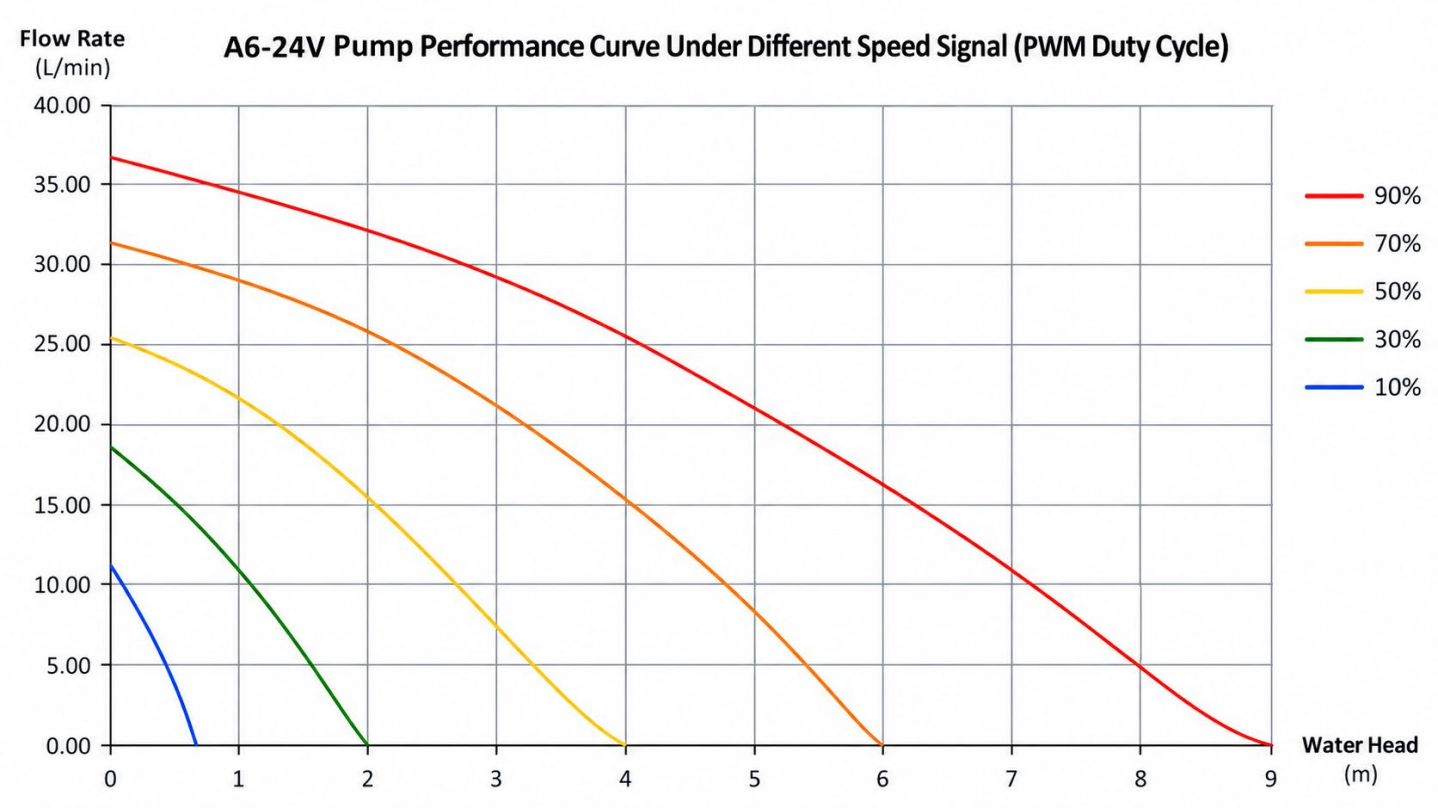

PWM ZWiring precautions

No.	Wrong wiring cases	Consequences	Correct wiring connection
1	Reserve positive and negative power supply	Pump without polarity protection will be burned	Red connected to the positive, black negative plus
2	PWM speed port is connected to power source directly	Pump will be burned if power supply is > 5V	Only voltage signal which is ≤ 5V can be connected
3	PWM speed port is connected to 0-5V signal	Pump will work normally if voltage is <5V	Only voltage signal which is ≤ 5V can be connected
4	Power supply is connected with AC power or DC power > DC30V	Pump will be burned	Accessing DC power within operating voltage range