US | Solar Pumps®
HOME FOR ALL YOUR MICRO-DC PUMP NEEDS!

A5, A6

Electronic Auto Pump



A5
Flow up to 25L/min



A6
Flow up to 37L/min

104~248°F working temperature 40°C~120°C

Areas of use

- Car engine cooling circulation
- Car engine pre-heating
- Heating system (Car Auxiliary heaters & parking heaters)
- Electric vehicles water circulation system
- Normal Hot Water Circulation
- Liquid Transfer
- General Purpose Pumping

Features

- DC brushless motor with long lifetime
- Heavy duty work, can sustain continual 24 hours
- Sustain -40~120°C, suitable for extreme outdoor environment
- Durable permanent magnetic rotor/impeller & fine ceramic shaft
- Advanced magnetic drive technology for static-impeller, without any leakage ever
- The motor with big machine movement optimization design, has very low temp rise
- Automatic polarity protection, overload protection, block protection
- Special design to meet car vibration working condition
- Specially designed for automotive power systems, the motor can withstand high voltage spikes and unstable power supply conditions
- Equipped with a specialized automotive waterproof connector
- Applied liquid: pure water, antifreeze solution
- IP protection level: IP 67
- Low or no maintenance
- Low power consumption

Electronic Auto Pump

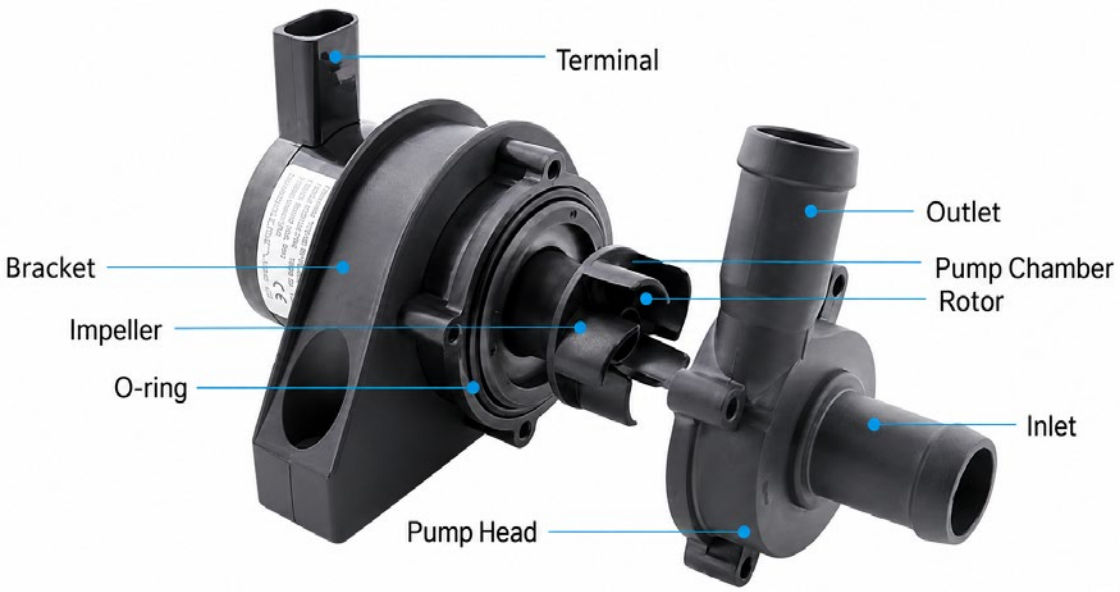

Materials of Construction (Wetted parts)

Wetted Parts	Materials	Wetted Parts	Materials
Pump Head	PPS	Bearing Sleeve	Graphite
Pump Chamber	PPS	Rotor Magnetic	Ferrite
O-ring	EPDM	Shaft	Stainless
Impeller	PA66	Gasket	Stainless

A5 Optional terminal

A5-R A/B -12-2503

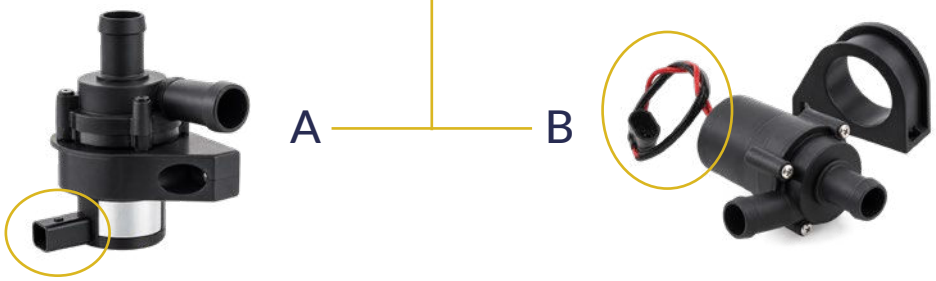

Electronic Auto Pump

Dimension (mm)

A5

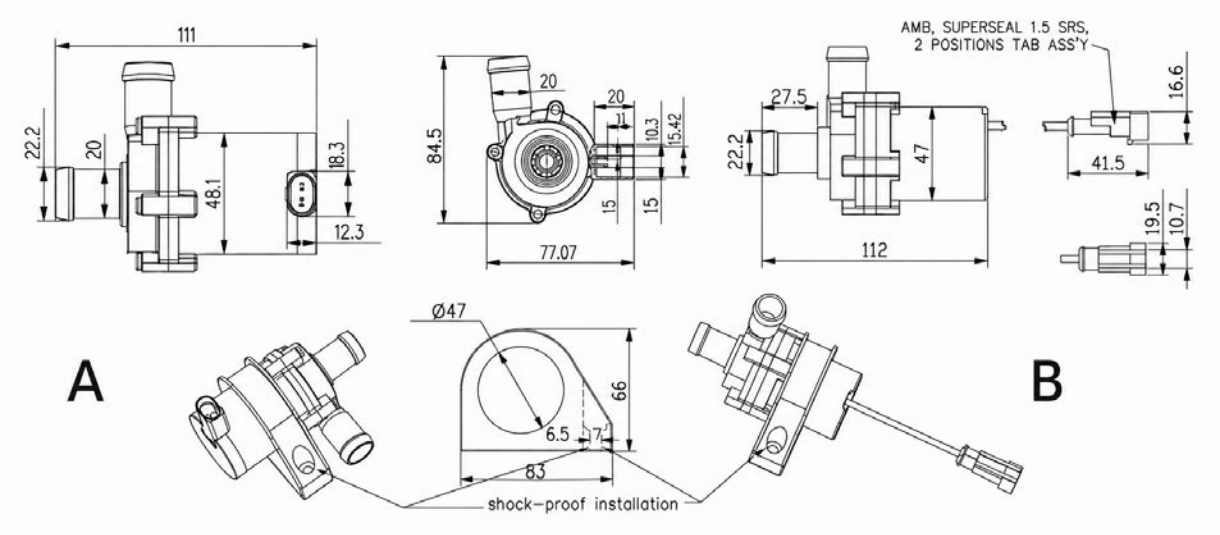

A6

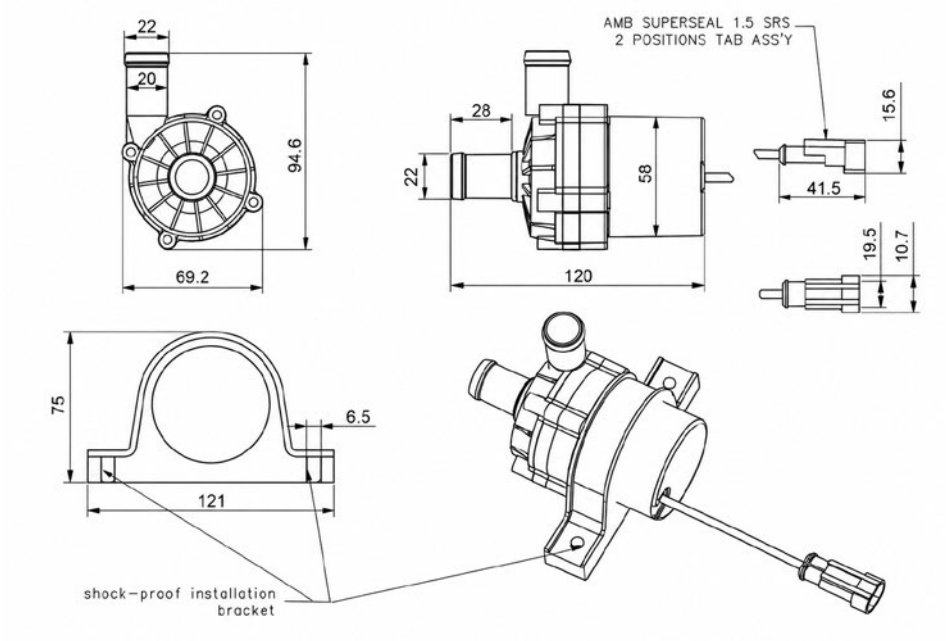

Electronic Auto Pump

Specification

Model	Product Code	Max Flow Rate (L/Min)	Voltage (VDC)	Current (A)	Max Water Head (M)	Power (W)
A5	A5-RA/RB-12-2502	25	12	1.1	2.5	13.5
	A5-RA/RB-24-2503	25	24	0.7	3	17
A6	A6-12-3709	37	12	4.6	9	55
	A6-24-3709	37	24	2.5	9	60

Curve

