US | Solar Pumps®
HOME FOR ALL YOUR MICRO-DC PUMP NEEDS!

A6

Micro Brushless DC Pump

CE | RoHS | REACH

TA60-R/TA60E-R



TA60E-B



Selectable Bracket-X4



Typical Applications

- Car engine cooling circulation
- Car engine pre-heating
- Heating system (car auxiliary heaters, parking heaters)
- Electric vehicles water circulation system
- Electric vehicles battery cooling system
- Liquid cooled EV charging stations
- Home energy storage cooling system

Features

- -45°C extreme low temperature cold start
- 20,000 hours long working life
- High dust and water resistance rating IP68
- Large rate

Specifications

Model	Product Code	Rated Voltage (VDC)	Max Water Flow (L/min)	Max Water Head (M)	Rated Current (A)	Rated Power (W)
TA60-R	TA60-R12-3409	12	34	8.5	4.6	55.2
	TA60-R24-3709	24	38	9.5	2.6	62.5
TA60E-R	TA60-R24-4018	24	40	18	3.0	72
TA60E-R	TA60-R24-3521	24	30.6	21	3.6	86.5
Customization: 1. /PWMM or /5V speed control 2. /FG (RPM) signal wire						

- The data in the table is the measured performance when pure water is delivered at normal temperature.
- The maximum flow rate is the flow rate when water head is 0 meter, and the highest lift when water flow is 0 L/min.
- Noise < 50 dB(A)
- Working mode: Continuous
- IP level: IP68
- Coil Insulation class: Class H
- Ambient temperature: TA60: -45°C ~70°C; TA60E: -45°C ~55°C
- Liquid temperature: TA60: -45°C ~90°C; TA60E: -45°C ~80°C
- Pumps must be in a continuous flooded suction environment.
- Do not run pumps dry.

A6 Solar Pump

Curve

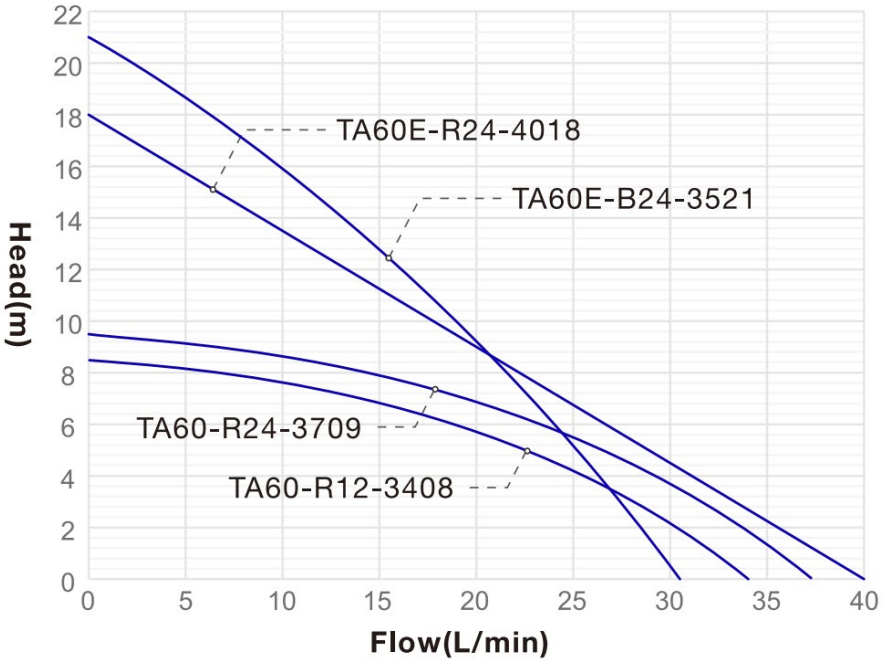

Dimension (mm)

TA60-R/TA60E-R

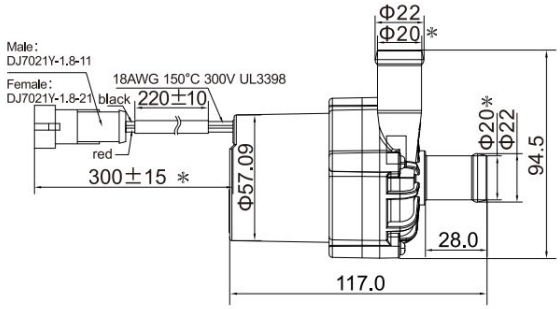

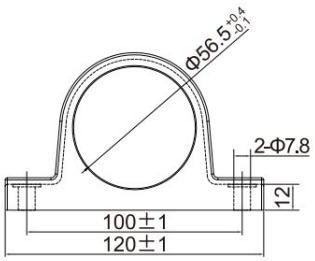

TA60E-B

